Colored Petri Nets for Multiscale Systems Biology – Current Modeling and Analysis Capabilities in Snoopy

Fei Liu
Control and Simulation Center
Harbin Institute of Technology
Harbin 150001, China
Email: liufei@hit.edu.cn

Monika Heiner
Department of Computer Science
Brandenburg University of Technology
Cottbus 03044, Germany
Email: monika.heiner@tu-cottbus.de

Ming Yang
Control and Simulation Center
Harbin Institute of Technology
Harbin 150001, China
Email: myang@hit.edu.cn

***Abstract*—Systems biology has introduced a number of multiscale challenges, which, however, can be tackled by colored Petri nets, but not by traditional approaches like ordinary differential equations or Petri nets. In this paper, after a brief covering of multiscale challenges of systems biology, we report the modeling and analysis capabilities of colored Petri nets, which Snoopy by now offers, and describe how these capabilities are used to address those multiscale challenges. In doing so, we aim to attract more researchers to use the powerful capabilities of colored Petri nets to model and analyze multiscale biological systems.**

I. Introduction

Systems Biology [1] is an emerging scientific discipline in bioscience research, which aims to understand the behavior of a biological system at the system level by means of investigating the behavior and interactions of all of the components in the system. A large variety of modeling approaches, e.g., Petri nets, Boolean networks and ordinary differential equations, have already been applied to modeling a wide field of biological systems (see [2] for a review). However, all these approaches do not easily scale, thus they are not ready to model complex biological systems.

Colored Petri nets [3], [4] are a colored extension of standard Petri nets, where a group of similar components are folded into one component, each of which is defined as and thus distinguished by a color. Colored Petri nets provide parameterized and compact representations of complex biological systems; however they do not lose the analysis capabilities of standard Petri nets, which can still be supported by automatic unfolding of colored Petri nets to standard Petri nets. Moreover, another attractive advantage of colored Petri nets for a biological modeler is that they provide the possibility to easily increase the size of a model consisting of many similar subnets only by adding new colors.

While there is a lot of reported work on the application of different classes of standard Petri nets to a variety of biochemical networks, see [2], [5] for recent reviews, there are only a few which take advantage of the additional power and ease of modeling offered by colored Petri nets, e.g., [6], [7], [8], for more details see [9]. These studies are rather small and usually resort to `Design/CPN` [10] or its successor `CPN Tools` [11]. However these tools were not specifically designed with the requirements of systems biology in mind. Thus they are not suitable in many aspects, e.g. they do not directly support stochastic or continuous modeling, nor stochastic or deterministic simulation.

Moreover, due to the ability to produce data of the same phenomenon at different scales, modeling of biological systems shifts from single biological scales to multiple scales (*multiscale modeling*) [12]. See Fig. 1 for a diagrammatic representation of some different biological scales and some of their hallmark phenomena [13]. Multiscale modeling has become one of the most important issues in the study of systems biology. Multiscale systems biology is distinguished by the following challenges according to [12], [14], [9]:

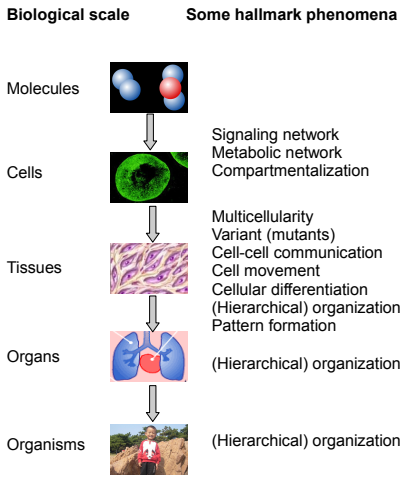

Fig. 1. A diagrammatic representation of some biological scales.

1) *Repetition of components* – for example in the tissue modeling there may be the need to describe multiple cells each of which has a similar definition.
2) *Variation of components* – sets of similar components with defined variations, e.g. mutants.
3) *Organization of components* – for example how cells are organized into regular or irregular patterns over spatial networks in one, two or three dimensions in the tissue modeling.
4) *Communication between components* – for example, quorum sensing takes place among cell populations

978-1-4799-1389-3/13/$31.00 ©2013 IEEE

in one, two or three dimensional space.

5) *Movement of components* – some components have the ability to move in a certain region, e.g. molecules within an individual cell or cells within a tissue.
6) *Hierarchical organization of components* – enabling the description of (possibly repeated) components which contain repeated sub-components. For example, in the tissue modeling, tissues contain a number of cells and cells contain several compartments.
7) *Differentiation of components* – for example, differentiation of embryonic stem cells or immune cells makes a less specialized cell more specialized.
8) *Replication of components* – e.g. cell division.
9) *Deletion of components* – e.g. cell death.
10) *Pattern formation of components* – organizing a number of cells in appropriate one, two or three dimensional structures in space and time.

All these challenges potentially could be tackled by colored Petri nets. Our software tool Snoopy [15] builds upon the lessons learned so far. It has recently been extended by specific functionalities and features to support editing, animating, simulating, and analyzing biological models based on colored qualitative, stochastic and continuous Petri nets [9]. It has been used to carry out several large case studies, see e.g., [16], [14].

II. Colored Petri nets

Cooperative ligand binding. We first consider an example of the binding of oxygen to the four subunits of a hemoglobin heterotetramer, illustrated in Fig. 2 (taken from [17]). The hemoglobin heterotetramer in the high and low affinity state binds to none, one, two, three or four oxygen molecules. Each of the ten states is represented by a place and oxygen feeds into the transitions that sequentially connect the respective places.

Furthermore, a colored Petri net model of Fig. 2 is illustrated in Fig. 3. Each of the five subnets in Fig. 2 is encoded as a color. A group of similar places (transitions) that are marked with the same color are represented as a colored place (transition).

Colored Petri nets. Colored Petri nets consist, as standard Petri nets, of places, transitions and arcs. Places (represented as circles) and transitions (represented as boxes) model biochemical species and reactions, respectively. Tokens on places represent the (discrete) quantities of species, which may be the number of molecules or the level of concentration of a species, or simply the presence of, e.g., a gene. Arcs carry stoichiometric information, called weight or multiplicity.

Additionally, a colored Petri net model is characterized by a set of color sets. Each place gets assigned a color set and may contain distinguishable tokens colored with a color of this color set. For example, in Fig. 3, a color set HbO2 is defined with five colors and is assigned to places HbO2L and HbO2H. As there can be several tokens of the same color on a given place, the tokens on a place define a multiset over the place's color set. A particular arrangement of tokens over a net specifies the current system state (marking). The initial state is called the initial marking, see 1‘0 for an example in Fig. 3, where 0 is a color and 1 is the number of tokens of this color.

Each transition gets a guard, which is a Boolean expression over defined variables, constants, etc. The guard must be

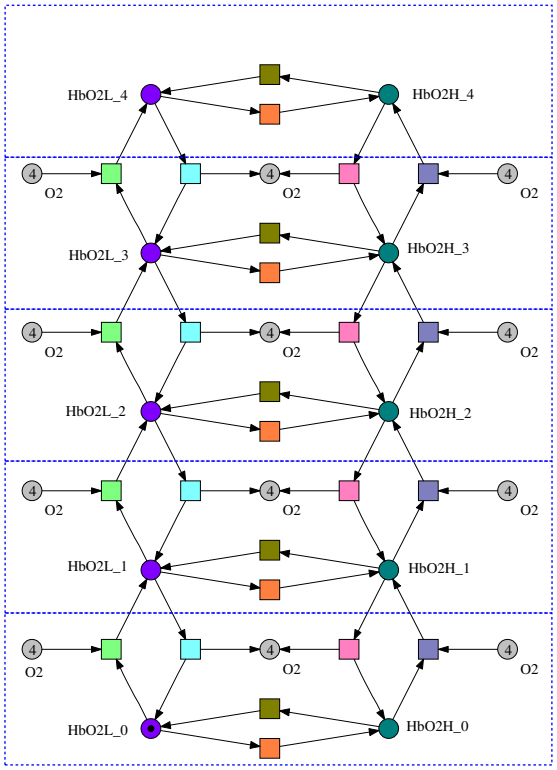

Fig. 2. Cooperative binding of oxygen to hemoglobin represented as a Petri net model [17]. For clarity, oxygen is represented in the form of multiple copies (logical places) of one place, O2. Besides, for the folding purpose, the whole net is partitioned into five similar subnets. Each group of nodes with the identical color will be folded into a node in a colored Petri net model.

TABLE I. Declarations for colored Petri net models of the cooperative ligand binding.

Category	Declaration
colorset	Dot = dot;
colorset	HbO2 = int with 0-4;
colorset	Level = enum with H, L;
colorset	HbLevel = product with HbO2 × Level;
variable	x: HbO2;
variable	y: Level;
Function	HbLevel Fun1(HbO2 x, Level y)
	{[y=L]1`($x$+1,$y$)++[$y$=H]1`(x, y)};
Function	HbLevel Fun2(HbO2 x, Level y)
	{[y=H]1`($x+1$, $y$)++[$y$=L]1`(x, y)};

evaluated to true for the enabling of the transition. The trivial guard "true" is usually not explicitly given. For example, in Fig. 3, transitions t1 to t4 have the same guard $x <> 4$. Each arc gets assigned an expression; the result type of this expression is a multiset over the color set of the connected place. For example, the arc from transition t1 to place HbO2L has the expression $x + 1$, which is a multiset over the color set HbO2.

More compact models. We can further obtain a more compact colored Petri net model (Fig. 4) by continuing folding the left and right parts in Fig. 3. Comparing Fig. 3 with Fig. 4, we can see that we can build colored Petri net model with different level of structural details, which is especially helpful for modeling complex biological systems. After automatic

978-1-4799-1389-3/13/$31.00 ©2013 IEEE

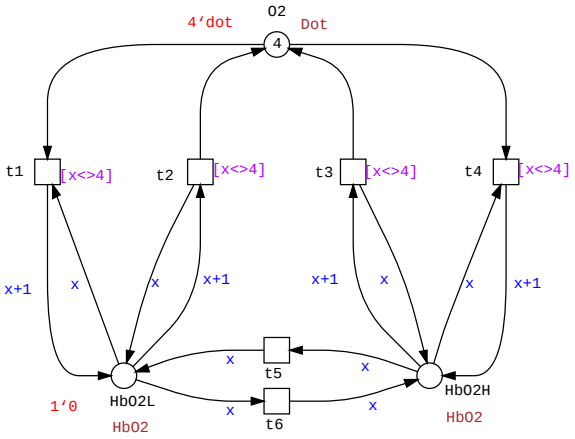

Fig. 3. A colored Petri net model for the cooperative binding of oxygen to hemoglobin, given as a standard Petri net in Fig. 2. See Table I for declarations.

unfolding, these two colored models yield exactly the same Petri net model as given in Fig. 2, i.e., the colored models and the uncolored model are equivalent. The declarations for both colored Petri net models are given in Table I.

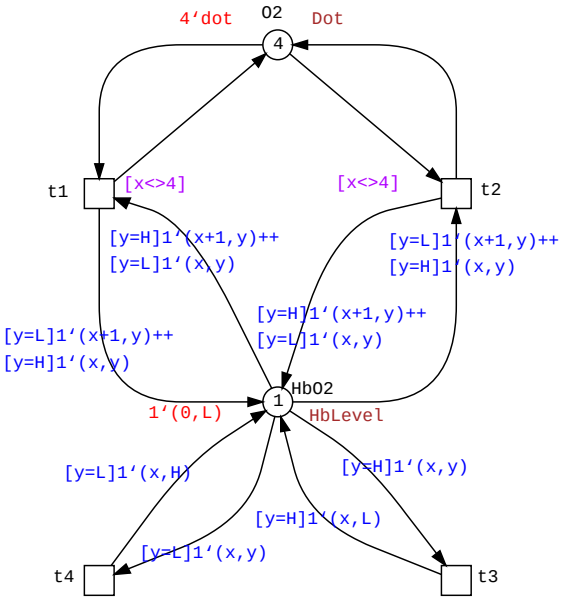

Fig. 4. Another colored Petri net model for the cooperative binding of oxygen to hemoglobin, given as a standard Petri net in Fig. 2. For declarations, see Table I.

III. Modeling Capabilities

In Snoopy, we have implemented a colored Petri net framework that includes colored qualitative and quantitative (stochastic, continuous, hybrid) Petri nets, which is motivated by multiscale systems biology. We provide for colored Petri nets a similar editing environment as for Petri nets; therefore biologists can easily draw a colored Petri net as usual.

See Fig. 5 for an user modeling interface of Snoopy, which mainly consists of:

- graphical elements window (the top left tree control): listing all graphical elements, e.g. node elements and edge elements,
- hierarchy window (the middle left tree control): showing the model hierarchy,
- declarations window (the bottom left tree control): containing all declarations, color sets, constants, variables and functions, for colored Petri nets,
- drawing canvas (the right window): drawing and showing models.

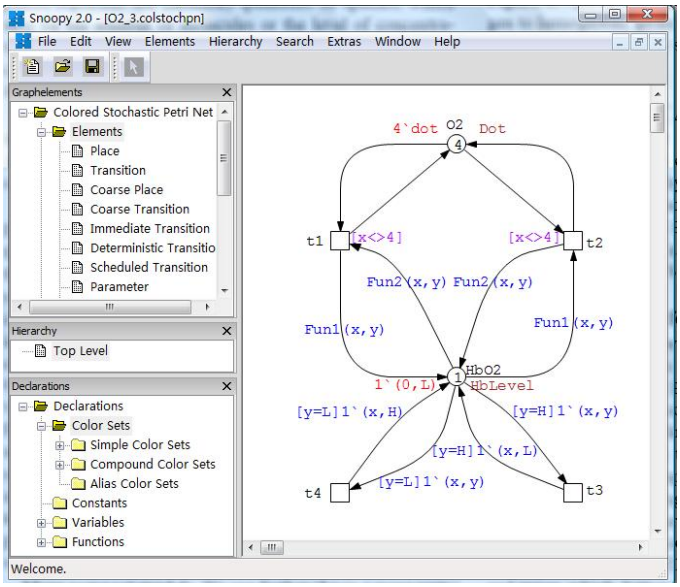

Fig. 5. User modeling interface of Snoopy.

A. Annotation language

Snoopy provides a powerful annotation language for defining declarations (such as color sets, variables and constants) that are used for colored Petri nets [18], which offer powerful and flexible ways to define complex expressions, thus well supporting biological modeling.

Color sets. The data types used for color set definition include simple and compound types. The simple types include dot (only containing one color), int (integer), string, bool (boolean), enum (enumeration) and index, which can be directly used for defining color sets, see the color set HbO2 in Table I for an example. The compound types include product and union, which, however, have to be based on previously defined (simple or compound) color sets. For example, the product color set HbLevel in Table I is based on two simple color sets: HbO2 and Level.

Subsets of color sets. Snoopy allows to define subsets based on a defined color set, i.e., using a logic expression (predicate) to select a group of colors. For example, suppose a color set CS=int with 1-10, variable x: CS. A subset CS_sub based on CS can be defined using the logic expression $x < 5$, which selects four colors, 1-4. Subsets of color sets are very useful in multiscale modeling of biological systems, e.g., using them we can model a specific (e.g., circular, rectangular) mutant area in order to study the effect of a mutant area on the whole area. See [16] for how to use subsets of color sets to define a specific geometrical area where Ca^{2+} channels function, and [14] for defining a mutant area using them.

978-1-4799-1389-3/13/$31.00 ©2013 IEEE

Operators and built-in functions. Snoopy supports rich operators (arithmetic, comparison, logic and others) and built-in functions. Arithmetic operators include $+$ (addition), $-$ (subtraction), $*$ (multiplicity), $/$ (division), $\%$ (modulus) and Comparison operators include = (equal), <> (unequal), $<$ (less than), <= (less than or equal to), $>$ (greater than), and >= (greater than or equal to). Logic operators include & (and), | (or), and ! (not). Other operators are also supported, e.g., successor (+), predecessor (-), and multiset addition (++). Besides, several built-in functions are offered, e.g., $all(x)$, returning all colors of a color set x, and $abs(x)$, returning the absolute value of a variable x.

User-defined functions. Snoopy also allows user-defined functions that are used all over in a colored Petri net, e.g., in the initial marking definition, arc expressions, or guards. A user-defined function contains the following components: function name, parameter list, function body, and return type.

For example, we may define user-defined functions to replace the lengthy expressions in Fig. 4. Two functions $Fun1$ and $Fun2$ are defined, see Fig. 6, which is equivalent to Fig. 4. See Table I for definitions of these two functions.

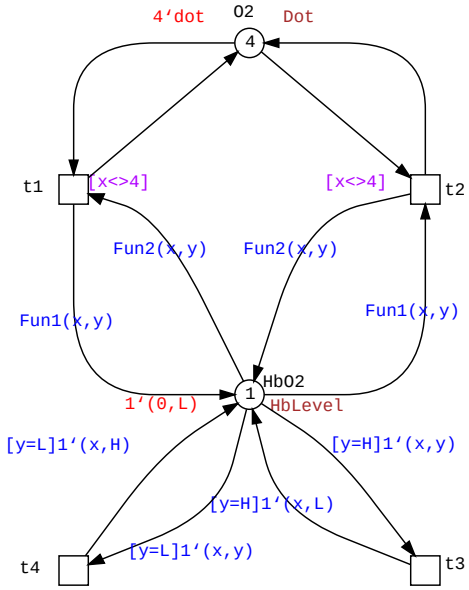

Fig. 6. Another colored Petri net model for the cooperative binding of oxygen to hemoglobin, which uses user-defined functions and is equivalent to Fig. 4. See Table I for declarations.

Specification of initial marking. Snoopy provides several ways for specifying initial markings (suppose an enumeration color set CS with five colors, a-e):

- Specifying colors and their corresponding tokens as usual, e.g., 2‘a (two tokens of the color a),
- Specifying a set of colors with the same number of tokens, e.g., 2‘(a,b,c) (two tokens of the colors a, b, and c, respectively),
- Using a predicate to choose a set of colors and then specifying the same number of tokens, e.g., 2‘$(x <> c)$ (two tokens of the colors a, b, e, and d, respectively),
- Using the $all()$ function to specify for all colors a specified number of tokens-
- Random generation of initial marking. We first set the number of tokens to be assigned to places and then determine the percentage for each place to obtain those tokens and finally randomly generate the initial marking. This function is very helpful for randomly generating the initial distribution of biological species.

B. Modeling support for systems biology

Snoopy considers special support for modeling biological systems by keeping biologists' needs and especially those challenges above in mind.

Multiple modeling formalisms. In order to address distinctive modeling demands of systems biology, several distinctive modeling paradigms (i.e., stochastic, continuous, or hybrid) may be needed. Motivated by this application scenario, a unifying colored Petri net framework (see Fig. 7) has been developed and implemented in Snoopy [15], which consists of colored qualitative Petri nets ($\mathcal{QPN}^{\mathcal{C}}$), colored stochastic Petri nets ($\mathcal{SPN}^{\mathcal{C}}$), colored continuous Petri nets ($\mathcal{CPN}^{\mathcal{C}}$), and colored generalized hybrid Petri nets ($\mathcal{GHPN}^{\mathcal{C}}$). This allows us to investigate one and the same case study with different modeling abstractions in various complementary ways.

For quantitative modeling in systems biology, where rate functions are often marking-dependent, popular kinetics like mass action semantics [19] and level semantics [20] are supported by pre-defined function patterns in Snoopy.

Automatic folding and unfolding. Uncolored Petri nets and colored Petri nets can be converted into each other by means of (semi-) automatic or user-guided folding (of uncolored Petri nets) or automatic unfolding (of colored Petri nets), see Fig. 8 for an example. Moving between the colored and uncolored level changes the style of representation, but does not change the actual net structure of the underlying reaction network. Therefore, all analysis techniques available for uncolored Petri nets can be applied to colored Petri nets as well.

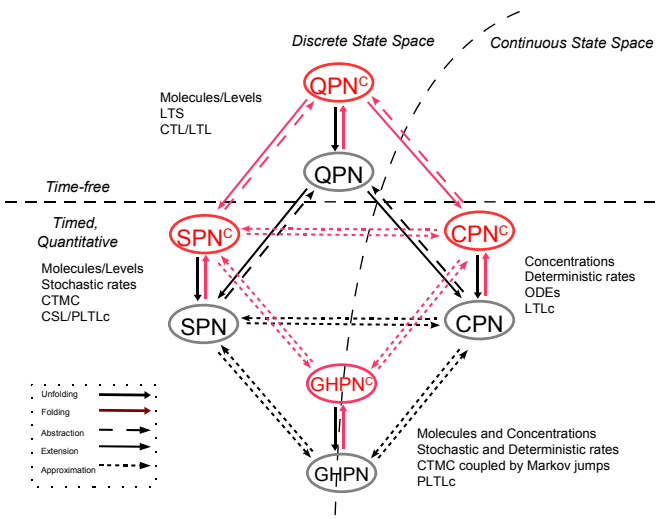

Fig. 7. A colored Petri net framework, adapted from [15].

Folding. Folding a Petri net means grouping several similar subnets and then overlay them, which we also call colorizing.

978-1-4799-1389-3/13/$31.00 ©2013 IEEE

Folding can be realized manually or automatically. Although automatic folding is usually attractive, to find similar subnets from a net for a given subnet (pattern) involves a subgraph isomorphism problem, which is NP-complete [21]. In Snoopy, we do not address the automatic folding based on subgraph isomorphism. Rather we consider some special scenarios. For example, 1) Colorizing any subset. Snoopy allows the user to select a subnet and then automatically color it with a given color set. As a result, all places have the same color set and all arcs the same expressions. This, in fact, just alleviates the coloring work. 2) Colorizing master Petri nets. The network reconstruction problem [22] aims to find a fitting model, e.g., a Petri net model, from given experimental data by considering all possible models (called master Petri nets). For this, colored Petri nets are used to model all possible networks by considering each possibility as a color.

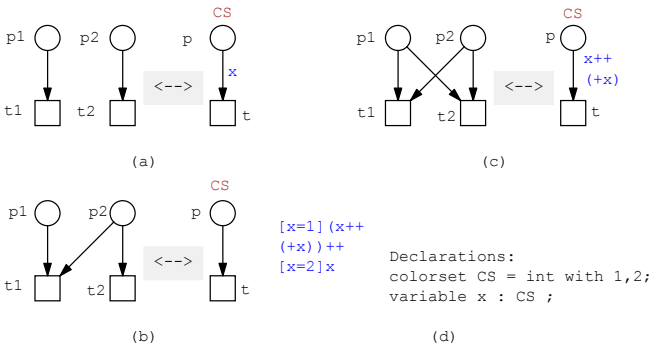

Fig. 8. Three folding and unfolding cases [23].

Unfolding. The key challenge when unfolding colored Petri nets is the computation of all transition instances, which in fact is a combinatorial problem, suffering from combinatorial explosion. For overcoming this, a constraint satisfaction approach has been employed. Specifically, the efficient search strategies of Gecode [24] has been used to greatly improve the unfolding efficiency of colored Petri nets. Besides, multi-threads are supported to further accelerate the unfolding. See [9] for details. For example, for the PCP model given in [14] the colored Petri net model for a 40*40 grid results in an uncolored model of 173,600 places and 234,248 transitions, the unfolding time being only about two minutes. See [14] for more experimental results.

Hierarchical modeling. Snoopy supports hierarchical color sets, i.e., a color set may consist of a hierarchy of L levels, and the number of colors in the color set of a level is given by the product of the number of underlying colors in the color set tuple from the next level. Theoretically, at each level, the size of the obtained net can be decreased to 1/2 of the net in the lower level. Thus using a color set of L levels, the size of the obtained net can be of $1/2^L$ of the original net.

For example, compare Fig. 2, Fig. 3, and Fig. 4. The color sets of Fig. 3 has a hierarchy of one level, while the color set HbLevel in Fig. 6 has a hierarchy of two levels. We can see that using color sets of more levels makes a net more compact. A large colored Petri net model of the phenomenon of Planar Cell Polarity (PCP) signaling in Drosophila wing is given in [14], which has a hierarchy of three levels: wing, cell and compartment. See also [16] for hierarchical modeling of coupled Ca^{2+} channels.

C. How to address multiscale challenges using colored Petri nets

For the first challenge, **repetition of components**, we can define each similar component as a color of a color set standing for the set of similar components, thus substantially decreasing the size of a large biological model. For example, each cell (or Ca^{2+}) is encoded as a color in [14] (or [16]).

In order to model **variations, e.g., mutation, of components**, we can encode mutant components like cells as colors and differentiate mutant and normal components using different colors. See e.g., [14], where a variety of genetic mutations that are placed in different clone shapes (rectangular, circular, elliptical) are studied.

Using hierarchical color sets, **(hierarchical) organization of components** can be easily represented, where each level of organization is described by a product color set. See e.g., [14] where two levels, tissues and cells, are considered, and [16] where two levels, Ca^{2+} clusters and Ca^{2+}, are modeled.

The **communication between components**, e.g., the quorum sensing, may be converted into the problem of information exchange between colors, each color denoting a component.

Likewise, the **movement of a component** from one position to another means to change the color representing the old position to that representing the new position. See e.g., the diffusion model in [25], where the species may move from one grid cell to another in a two-dimensional grid.

For the **differentiation of a component**, each of the different stages of the component is encoded as a color. See e.g., the phase variation in bacterial colony growth in [25], where cells division is considered.

Besides, the **replication or death of a component** can be modeled as that a new color is created in a color set or a color is removed from the color set, respectively. See [9] for more details.

IV. Analysis Capabilities

Petri net theory offers a rich body of analysis techniques, which can also be used for colored Petri nets. In this section, we will briefly describe some with the focus on how to use them for colored Petri nets with the tools, Snoopy and its friends, Charlie [26], Marcie [27] and MC2 tool [28], see Fig. 9.

Behavioral and structural properties. Petri net theory offers a set of behavioral and structural properties. The general behavioral properties include boundedness, liveness, and reversibility. Structural properties can be further classified as elementary graph properties like connectedness, siphons/traps, and place/transition invariants [20]. These properties are usually used as preliminary checks of Petri nets.

In order to use these properties to analyze a colored Petri net, we can automatically unfold the colored net to an uncolored Petri net, which is then fed into Charlie to obtain analysis results.

978-1-4799-1389-3/13/$31.00 ©2013 IEEE

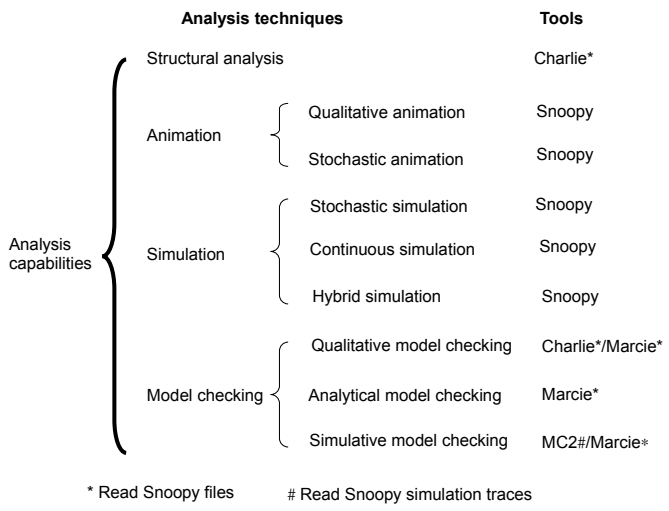

Fig. 9. Analysis capabilities for colored Petri nets offered by Snoopy and its friends.

Animation. Colored Petri nets can be animated in Snoopy, so we can execute a colored Petri net by playing the token game to experience the net behavior [18]. For colored qualitative Petri nets, time-free animation is provided. For colored stochastic Petri nets, time-dependent animation is available, which means that an automatic animation corresponds to a stochastic simulation run.

Besides, we can choose automatic animation or manually trigger a transition instance from all the enabled transition instances, which are automatically computed.

Simulation. Simulation has been implemented for colored quantitative (stochastic/continuous/hybrid) Petri nets, which is done on automatically unfolded uncolored Petri nets.

For colored stochastic Petri nets, the Gillespie stochastic simulation algorithm (SSA) [29] has been implemented in Snoopy.

Continuous simulation, implemented in Snoopy [15], has so far 14 different stiff/unstiff ODE integrators, which are used to integrate the ODEs induced by a continuous Petri net model

In hybrid simulation of Snoopy, SSA is implemented to simulate stochastic transitions, and 14 integrators, as are provided for continuous simulation, are used to integrate the ODEs induced by the continuous transitions. Hybrid simulation can be done with a static or dynamic partitioning scheme.

Model checking. If the state space is finite and of manageable magnitude, analytical model checking can be used to analyze a Petri net model, otherwise simulative model checking may help to obtain an approximative answer.

In order to use analytical model checking for a colored Petri net, we have to first export it to an uncolored Petri net, which is then read by Marcie to obtain analysis results. But for simulative model checking, we either use Marcie again or we only need Snoopy's simulation traces, which are fed to MC2 tool to obtain analysis results.

V. Applications

Snoopy's colored Petri nets have been applied to investigate a variety of large-scale biological systems, proving its capability to solve many challenges imposed by multiscale systems biology.

For example, the PCP model [14] includes the repetition of components in a two-level hierarchy of different geometries. In the higher inter-cellular level, cells are located in a rectangular honeycomb grid, representing the epithelium tissue, and the lower level is the intra-cellular organization represented by virtual compartments within one cell in a circular grid. Moreover variations among cells are modeled in the form of patches of mutant cells which lack a specific signaling protein.

In [30], a colored Petri net model is built for the phase variation in bacterial colony growth, where cells divide individually and explicitly consider spreading in space. The issues highlighted in this example include multiple scales (from individual level to colony level), mutation with cell division, mobility of cells, and 2D pattern formation.

In [16], colored Petri net models are developed for describing spatially arranged clusters of Ca^{2+} channels, which involves hierarchical organization of channels, i.e., clusters are arranged in a two-dimensional lattice, and channels are arranged in another two-dimensional sub-lattice in each element of the cluster lattice.

In [31], colored stochastic Petri nets are used to model stochastic membrane systems with active membranes, where dynamic color sets for representing active membranes are discussed.

More applications can be found,e.g., in [9], [25].

VI. Conclusion

Systems biology has brought a number of multiscale challenges, which, however, are hard to be solved by standard modeling approaches like ODEs and Petri nets, but colored Petri nets do. By keeping these challenges in mind, we developed a colored Petri net framework and implemented it in our modeling tool, Snoopy.

In this paper, we reported the modeling and analysis capabilities that Snoopy now offers and described how these capabilities are used to address those multiscale challenges. So far we have not found other comparable tools.

By now, Snoopy has been applied to modeling and analyzing several large case studies that exhibit multiscale challenges. We are continuing to find out more multiscale challenges and to implement more capabilities to address them.

Acknowledgments

This work has been supported by Germany Federal Ministry of Education and Research (0315449H), Natural Scientific Research Innovation Foundation in Harbin Institute of Technology (HIT.NSRIF.2009005), and National Natural Science Foundation of China (61273226). We would like to thank David Gilbert and Wolfgang Marwan for many fruitful discussions, and Mary Ann Blätke, Mostafa Herajy, Christian Rohr, and Martin Schwarick for their assistance in model construction, software development and model checking.

978-1-4799-1389-3/13/$31.00 ©2013 IEEE

REFERENCES

[1] H. Kitano, "Systems biology: A brief overview," *Science*, vol. 295, no. 5560, pp. 1662–1664, 2002.

[2] P. Baldan, N. Cocco, A. Marin, and M. Simeoni, "Petri nets for modelling metabolic pathways: a survey," *Natural Computing*, vol. 9, no. 4, pp. 955–989, 2010.

[3] H. J. Genrich and K. Lautenbach, "The analysis of distributed systems by means of predicate/transition-nets," in *Proc. of the International Sympoisum on Semantics of Concurrent Computation*, ser. LNCS 70. Springer, 1979, pp. 123–146.

[4] K. Jensen, "Coloured Petri nets and the invariant-method," *Theoretical Computer Science*, vol. 14, no. 3, pp. 317–336, 1981.

[5] C. Chaouiya, "Petri net modelling of biological networks," *Briefings in Bioinformatics*, vol. 8, no. 4, pp. 210–219, 2007.

[6] N. Bahi-Jaber and D. Pontier, "Modeling transmission of directly transmitted infectious diseases using colored stochastic Petri nets," *Mathematical Biosciences*, vol. 185, pp. 1–13, 2003.

[7] M. Peleg, I. S. Gabashvili, and R. B. Altman, "Qualitative models of molecular function: Linking genetic polymorphisms of trna to their functional sequelae," *Proceedings of the IEEE*, vol. 90, no. 12, pp. 1875–1886, 2002.

[8] K. Voss, M. Heiner, and I. Koch, "Steady state analysis of metabolic pathways using Petri nets," *In Silico Biology*, vol. 3, p. 0031, 2003.

[9] F. Liu, "Colored Petri nets for Systems Biology," Ph.D. dissertation, Department of Computer Science, Brandenburg University of Technology Cottbus, 2012.

[10] S. Christensen, J. B. Jrgensen, and L. M. Kristensen, "Design/CPN - a computer tool for coloured Petri nets," in *Proc. of the Third International Workshop on Tools and Algorithms for Construction and Analysis of Systems*, ser. LNCS 1217. Springer, 1997, pp. 209–223.

[11] K. Jensen and L. Kristensen, *Coloured Petri Nets*. Springer, 2009.

[12] J. C. Dallon, "Multiscale modeling of cellular systems in biology," *Current Opinion in Colloid and Interface Science*, vol. 15, no. 1-2, pp. 24–31, 2010.

[13] M. Meier-Schellersheim, I. D. C. Fraser, and F. Klauschen, "Multiscale modeling for biologists," *Systems Biology and Medicine*, vol. 1, pp. 4–14, 2009.

[14] Q. Gao, D. Gilbert, M. Heiner, F. Liu, D. Maccagnola, and D. Tree, "Multiscale Modelling and Analysis of Planar Cell Polarity in the Drosophila Wing," *IEEE/ACM Transactions on Computational Biology and Bioinformatics*, vol. 99, no. PrePrints, pp. 1–1, 2012.

[15] M. Heiner, M. Herajy, F. Liu, C. Rohr, and M. Schwarick, "Snoopy - a unifying Petri net tool," in *Proc. PETRI NETS 2012*, ser. LNCS 7347. Springer, 2012, pp. 398–407.

[16] F. Liu and M. Heiner, "Multiscale modelling of coupled Ca^{2+} channels using coloured stochastic Petri nets," *IET Systems Biology*, 2013.

[17] W. Marwan, A. Wagler, and R. Weismantel, "Petri nets as a framework for the reconstruction and analysis of signal transduction pathways and regulatory networks," *Natural Computing*, vol. 10, no. 2, pp. 639–654, 2011.

[18] F. Liu, M. Heiner, and C. Rohr, "Manual for colored Petri nets in snoopy," Technical report 02-12, Department of Computer Science, Brandenburg University of Technology Cottbus, Tech. Rep., March 2012, http://www-dssz.informatik.tu-cottbus.de/publications/btu-reports/Manual_for_colored_Petri_nets_2012_03.pdf.

[19] E. W. Lund, "Guldberg and waage and the law of mass action," *Journal of Chemical Education*, vol. 42, no. 10, p. 548, 1965.

[20] M. Heiner, D. Gilbert, and R. Donaldson, "Petri nets for systems and synthetic biology," in *Proc. of the 8th international conference on Formal methods for computational systems biology*, ser. LNCS 5016. Springer, 2008, pp. 215–264.

[21] S. A. Cook, "The complexity of theorem-proving procedures," in *Proc. of the 3rd ACM Symposium on Theory of Computing*. ACM, 1971, pp. 151–158.

[22] W. Marwan, A. Wagler, and R. Weismantel, "A mathematical approach to solve the network reconstruction problem," *Mathematical Methods of Operations Research*, vol. 67, no. 1, pp. 117–132, 2008.

[23] F. Liu and M. Heiner, "Colored Petri nets to model and simulate biological systems," in *Proc. of International Workshop on Biological Processes and Petri Nets, satellite event of Petri Nets*, vol. 724. CEUR, 2010, pp. 71–85.

[24] Gecode, http://www.gecode.org/, 2013.

[25] M. Heiner and D. Gilbert, "Biomodel engineering for multiscale systems biology," *Progress in Biophysics and Molecular Biology*, vol. 111, no. 2/3, pp. 119–128, 2013.

[26] J. Wegener, M. Schwarick, and M. Heiner, " A Plugin System for Charlie ," in *Proc. International Workshop on Concurrency, Specification, and Programming (CS&P 2011)*, ser. ISBN: 978-83-62582-06-8. Białystok University of Technology, September 2011, pp. 531–554.

[27] M. Heiner, C. Rohr, and M. Schwarick, "MARCIE - Model checking And Reachability analysis done effiCIEntly," in *Proc. PETRI NETS 2013*, ser. LNCS 7927. Springer, June 2013, pp. 389–399.

[28] R. Donaldson and D. Gilbert, "A model checking approach to the parameter estimation of biochemical pathways," in *Proc. of the 6th International Conference on Computational Methods in Systems Biology*, ser. LNCS 5307. Springer, 2008, pp. 269–287.

[29] D. T. Gillespie, "Exact stochastic simulation of coupled chemical reactions," *Journal of Physical Chemistry*, vol. 81, no. 25, pp. 2340–2361, 1977.

[30] D. Gilbert, M. Heiner, F. Liu, and N. Saunders, "Colouring Space - A Coloured Framework for Spatial Modelling in Systems Biology," in *Proc. PETRI NETS 2013*, ser. LNCS 7927. Springer, June 2013, pp. 230–249.

[31] F. Liu and M. Heiner, "Modeling membrane systems using colored stochastic Petri nets," *Natural Computing*, 2013.

978-1-4799-1389-3/13/$31.00 ©2013 IEEE